Beate Flath, Christoph Jacke, and
Manuel Troike, Hrsg./Eds. 2022.
Transformational POP: Transitions, Breaks, and Crises in Popular Music (Studies)
(~Vibes – The IASPM D-A-CH Series 2).

Alan van Keeken

Socialism in the Wires? The Production of the Electronic Organ Vermona Formation 1 (1980)

Figure 1: The Vermona Formation 1, that the author bought from Ebay. Picture: Mario Brand 2020

Introduction

Musical instruments are materializations not just of music theory or culture, but also of production cultures. Be it little workshops or international businesses: Certain routines, values, internal power struggles, ecological effects and economic structures leave their marks on sound producing devices. In this article I want to conduct a case study to illustrate this relationship between the production sites routines and instrument building: The Vermona Formation 1 electronic organ, which was produced in the GDR (German Democratic Republik) and first put on the market in 1980. The instrument belonged to the last model series (including the Formation 2 and 3) based solely on analog sound production and failed to succeed with the target audiences, the west-oriented rock musicians of the GDR. A good documentation of the inner bureaucracy of the VEB (public-owned-enterprise, Volkseigener Betrieb) Klingenthaler Harmonikawerke (henceforth called VEB KHW) allows us to reexamine the way, from sketches to the final product and its reception. These documents from the state archive of the federal state Saxony in Chemnitz present the seldom possibility to study the process of musical instrument design that in other (mostly western) cases were lost or are not accessible to the public. Listening to the sound and looking into the circuitry makes it possible to discover the inscriptions of production culture that reach down to the core of sound generation. They tell a story of ambition, disappointment, and the limitations of the early 1980s GDR (musical instrument) economy.

First, I will contextualize my research as part of the project "Musical objects of popular culture" and present the methodological tool of our subproject "generators of sound", the socio-technical artifact analysis. In this context I especially discuss the term production culture and user de-sign as theoretical concepts to investigate instruments of popular culture. In our project, this term was applied to tackle apparatuses connected to musical styles like Schlager, Rock, Pop and Muzak but not including classical or experimental music. In the following part I shortly introduce the instrument and its musical and technical features and contextualize it in the international "instrumentscape" (Dawe 2010, 41 ff.) of electronic/combo organs. This description is based on a model that I bought in the year 2020 from an online thrift shop (s. Fig. 1. Cover Picture). After a brief contextualization of the production of electronic music instruments I detail the path from concept to production of the Formation series, focusing on the Formation 1 and its technological and design template, the Formation 2. The article closes with the reception of the instrument as it was documented in internal papers and published in the music press.

This paper presents one of the first scientific works on the production of electronic instruments in the GDR and especially at the VEB KHW, which has been covered so far only in German language journalistic articles (Hofmann, February 20, 1999) and publications (Hofmann 2014) as well as radio features (Schimke 2009) and websites (Würker and Würker 2017). While there has been numerous works on the craftsmanship and artifacts of the *Musikwinkel* – just recently about one of Europe's greatest guitar manufacturers of the Cold War era (Fröhlich and Gertoberens 2020) – most research concentrates on traditional instruments like violins and brass instruments (Weller 2018, 217). This research is carried out with great passion under the wings of the local Musikinstrumentenmuseum in Markneukirchen.

Socio-technical Artifact Analysis and Production Culture

My investigation of the Vermona Formation 1 was part of the project "Musical objects of popular culture", funded by the German federal ministry of education and research (Bundesministerium für Bildung und Forschumg, BMBF), initiated in 2018 (Jost and Pfleiderer 2019). The project's goal was to uncover social and technological trajectories of music technologies in Germany from 1945 until today. It covered three object groups: listening devices (radio, CD-player, loudspeakers), storage media (CD, phonograph record, cassette) and finally the tools of music production like musical instruments, mixing desks and microphones. In the respective project divisions, we selected seven to eight specific objects - each spanning different genre, times and uses (professional/amateur) - and created so-called object dossiers. These were always structured alike, starting with a thorough description, followed by a look into the context of its production and finally examining its use in everyday or professional music making. These object dossiers have been published in the German language in the volume *Audiowelten* (Burkhart et al. 2022) and also contain an extensive article on the Formation 1. This article on hand is based on the same research but also explains some methodological background and tries to connect elements of the case study to questions of production culture and its influence on (industrial) musical instrument design.

Methodologically, the project groups had to develop individual approaches according to the peculiarities of the respective object groups. My paper focuses on the socio-technical artifact analysis that was especially designed for objects of music production. It is based on a struc-

tured qualitative approach developed by Ulrike Froschauer and Manfred Lueger: They propose a step-by-step procedure to dissect the different roles objects play in organizations or social relations and uncover the meaning that is constructed around its material and functional affordances (Froschauer and Lueger 2016; Lueger and Froschauer 2018). We streamlined their five steps to the above three and – as suggested by the authors – adjusted the artifact analysis according to our field of interest. That meant to strengthen the agential position of materiality and technology in our understanding of musical objects, balancing the mostly social-constructivist approach of the original artifact analysis. Also, we looked into the additional dimensions of the objects sound and interface design as important dimensions of musical instruments.

Here, I want to put the spotlight on the second part of our dossier format, which investigates production cultures. The production culture perspective looks at the production side of cultural goods (music, movies, films, novels, television series) and conceptualizes its success or failure as a result of (at least) six interconnected facets: "These include technology, law and regulation, industry structure, organization structure, occupational career, and market." (Peterson and Anand 2004, 313). These facets influence the aesthetic appearance of the respective goods, they restrict certain developments while making others possible. The term originates in organization studies and was further developed in sociology, most prominently by Richard A. Peterson and Paul DiMaggio's studies on music industry.

While the approach has mainly been applied to popular media, its principal shift of focus from reception to the production can also enrichen the research into the development and success of musical instruments such as the Vermona Formation 1. In the case of material goods however, it helped to constrict the notion of production of culture perspective to the process and conditions of design, production, and the parties concerned, be it workers, designers, administrative instances or the material itself. For this we found the concept of the "user de-sign" (Akrich 1992) to be compatible. Just like in production of culture research (Nathaus 2014) it tries to conceptualize the gap between production and consumption that results from the designer or firm not having direct access to the future user's needs. This results in the necessary (social) construction of the future user in the process of designing. Though this process can be supported by market research, focus groups, or users directly involved in the construction process, this demand side stays a black box that must be filled conceptually on the side of the production.

In this conceptualization the designers, inventors and engineers' values, stereotypes and professional ethos all come to shape the final products aesthetic and functionality (as a kind of the above-mentioned facet on the microlevel). Sometimes they even – without mediation – set themselves as standard, what is discussed as the so-called I-Methodology (Oudshoorn, Rommes, and Stienstra 2004). These inner motivations, in some cases labeled e. g. as cultural imperatives (see Schiffer 1993) often help to set in motion new technologies in the first place. At the same time facets like the state of technology as well as the access to certain primary products or materials get to shape the design of the final product. This aspect is especially relevant under conditions of the cold-war era, the times of the Vermona Formation 1. This era knew two – though partially connected – economic spheres competing and shielding themselves from each other, especially in regard to dual use technology that could be applied to rockets as well as electronic organs. But before we go into the details of the production, let us start with the design and makeup of our artifact, the Formation 1.

The Formation 1 – Interface, Design, and Sound (Generation)

The Vermona Formation 1 belongs to the typical electronic organs, that populated rock and pop stages on from the 1960s known as "combo organs" (Carson 1996, 32). Its 61 plastic keys manual is encased in a housing of metal topped with a wooden shelf. This main module is sitting in a case of sturdy plastic, which can be closed for transportation. The control panel holds four drawbars and one effect section grouped around a mixing control. The different sections are differentiated through a color scheme; grey for example marks the bass section, which is also mirrored in the grey keys of the left two octaves of the keyboard. The instrument is attached to a robust stand of black metal, which displays the brand's name Vermona on a stabilizing center brace. Like most electronic instruments of this era, it must be connected to an amplifier and loudspeaker (via jack plug, which hints at the standardization of this format transcending the Iron Curtain) (see Fig. 2) to produce sound. Via a separate black foot pedal in a plastic case the overall loudness can be adjusted.

Figure 2: The backside of the instrument with the power supply and the jack plug. Picture Mario Brand 2020

The Formation 1 main interface, especially the control panel, is designed after the pipe organs disposition, so that the player has the choice between different stops that can be opened or closed to change the resulting sound. Through the switches it is possible to adjust the share of each stop precisely and stepless (see Fig. 3). Each of these switches is named after standard organ stops virtually referencing the foot length of the pipes of a pipe organ. In electronic organs this simply means that if for example a 16′ stop is activated, a tone will occur that is one octave lower than the actual key depressed (with 8′ being the stop for the actual, notated tone). The principal two section consist of six stops ranging from 16′ (one octave lower) to 1 3/5′ (two octaves and a third higher). If one stop of the bass section (flutes 1) is turned up, the keyboard is split into two sections whose sound can be adjusted independently. When the bass section is turned down all the way, all other sections can be played across the whole keyboard. To deliver a simulation of the attack of key instruments, a third section named percussion is included, adding a more noise like click with a weak pitch. Three additional, single voices named clarinet, oboe, and nasal form a final section labeled "solo".

The sound generation is modelled after the Hammond organ, a fact that is not just referenced in the manual and advertisement but also discussed throughout the planning process of the new model series. The sinus tones of the main sections (each with a different pitch according to the respective stops) add up to an organ-like hovering sound (listen to sound example 1 & sound example 2). The basis of its sound generator is a top octave synthesizer (see Fig. 4) as they were used in most of the cheaper combo organ models from the middle of the 1970s. It is a miniaturized version of the older transistor based sound generation design that needed multi-

ple main oscillators. The high frequency (about 2 megahertz) of an oscillator clock goes into the integrated circuit and is split up into the 12 semitones of the chromatic, equal tempered scale. These then can be further divided by so called frequency dividers, also called divide-by-two chips to produce all the needed tones for the many stops of the instrument that sound at the same time. (see Duane 1999, n. p.). The Formation 1 exclusively uses US-American products, the MM5555 and the MM5556 from National Semi Conductor as well as the more advanced MK 50 240 C from Mostek. To produce more harsh timbres of the respective instruments, the "solo section" utilizes additional square and rectangle waves and filter circuits. The picture of the sound generation system showcases the miniaturizing effect of the new design, if it is compared to the inner life of e. g. the famous Vox organ of the 1960s (see Fig. 5).

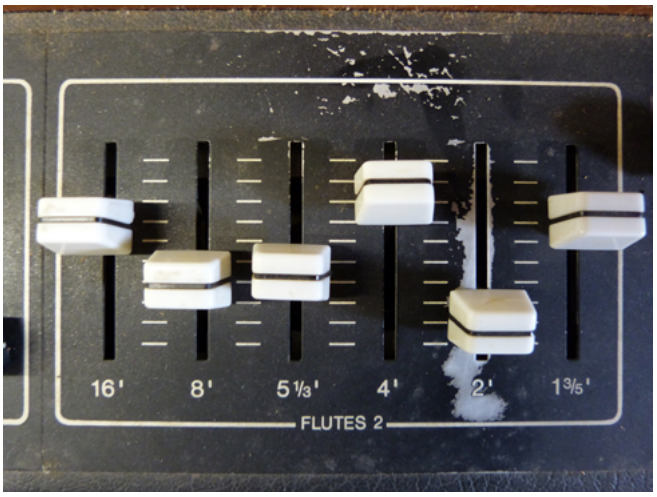

Figure 3: Detail of the stops section from another, rather intensively used Formation 1, showing drastic wear at the seemingly most adjusted 8′ Stop. Picture: Laura Niebling 2020

The left side of the interface houses the effect section. It consists of a phasing effect, a low pass filter ("soft"), a (spring)reverb, and the adjustment of the percussion. The phasing effect can be applied to each section individually. Also, some parameters of the phasing motion can be adjusted stepless, namely the speed of the phase oscillation, the intensity, and the feedback, which makes possible a great range of settings.

The Production of Electronic Musical instruments in the *Musikwinkel* and the Prehistory of the Formation 1

The commercial production of electronic musical instruments in the GDR started with a sensation: A joint venture of private and state-owned firms presented one of the first fully electronic keyboard instruments of Germany, the Ionika, at the Leipzig fair in 1958 (see Hofmann 1999). In the following years, the production of electronic instruments became more and more centralized. This was part of the general economic strategy of the GDR. The state started to expropriate private businesses and centralized the production of whole industrial branches. In the case of the production of electronic instruments, the authorities organized the former joint ventures under the newly formed VEB KHW, together with the production of harmonium instruments. At the end of the 1960s, the production moved to a former cigarette factory in

the Vogtland city of Schöneck (Börner and Krause 1988, 48–51). The brand name Vermona for electronic instruments was used from the 1970s on.

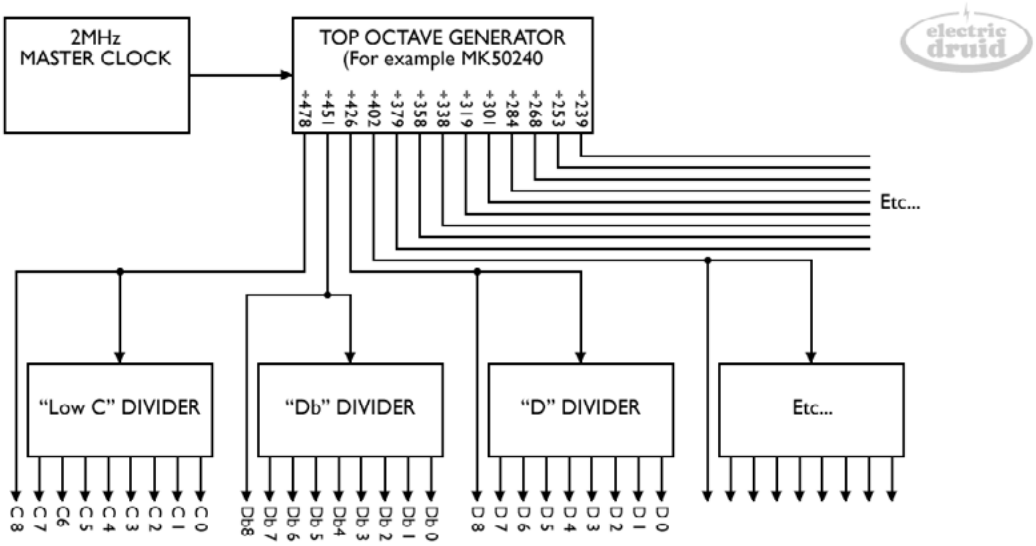

Figure 4: The graphic from the website electricdurid.net showcases the basic working principle of a top octave synthesizer as they were used in the Formation 1. Source: https://electricdruid.net/wp-content/uploads/2016/12/MK50240-Scheme.png

There were multiple developments that paved the way for the production of a new model series of which the Formation 1 would eventually become the one manual variant of. The ET-6 series introduced in the 1970s constituted a turning point for the KHW: They celebrated their first exports to the *NSW*, the not-socialist world, the name given to all countries outside the Comecon organization. So far, the KHW had exported electronic organs just to these countries, especially soviet Russia. While on the one side this aided the GDR in generating much-needed foreign currencies, it also forced the VEB KHW into *direct* competition with the much more developed western market and electric organ technology. In the so-called *Studienberichte* (study reports) employees of the VEB KHW reported on the newest developments on the western market for electronic organs and investigated sample instruments and technologies.

But technical progress did not halt in Schöneck either. The company refined the circuit design of the sound generators and developed components which could be produced within the state economy. The top octave synthesizer principle helped streamlining the circuit boards, which reduced the number of individual parts needed and improved tuning stability, which in turn adhered to the standards of material frugality imposed by the ASMW, the *Amt für Standardisierung, Meßwesen und Warenprüfung* (a state department of the GDR monitoring the compliance of industrial norms, the TLG, *Technische Normen, Gütevorschriften und Lieferbedingungen*). Additionally, they began to use metal parts in the keyboard and switched from germanium to more stable and resilient silicon transistors. The U 112 D, a much-needed frequency divider (see Fig. 6), was the product of a joint venture between the VEB KHW and the Kombinat Funkwerke Erfurt, the GDR's main plant for transistors and microprocessors. It was one of the few instances where crucial parts could be produced domestically and would not have to be imported or – from the 1980s on – smuggled from Western Germany as in the case of the US-American TOS chips used in the Formation 1 & 2.

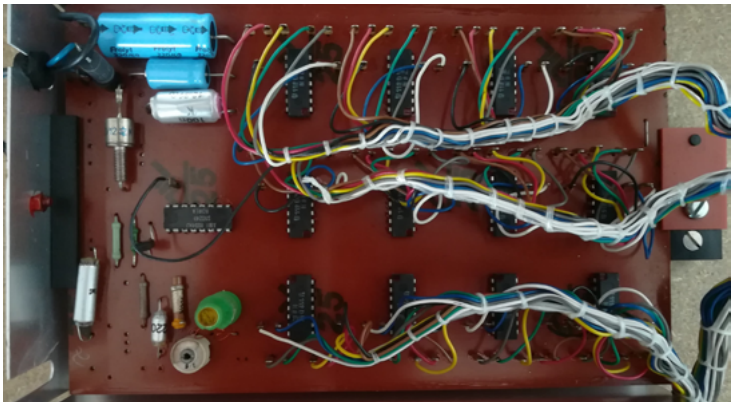

Figure 5: The heart of the sound generation of the Vermona Formation 1. Picture: The author 2021

The change in the leadership in the GDR, the *Politbüro*, went along with a change in the general direction of the economy. While the former leading figure, Walter Ulbrich had focused on the development of science and technology to achieve a big step forward to catch up with the west, Erich Honnecker saw the problem of the dwindling acceptance of the GDR by its own general population. Therefore, he proposed a "consume socialism" (Malycha 2016) which tried to satisfy people with modern housing, cars, electronic devices and other luxury goods. These should be comparable with the products from the west. This change in economic politics however had no big effect on the musical instrument industry. The near impossible tasks remained the same: (1) producing high quality products, (2) reducing the parts that had to be imported from outside the GDR, especially using western currencies and (3) satisfying the Comecon as well as the domestic market's demand. Additionally, already under Ulbricht's rule, especially musical instruments had to contribute their share to *obtain* foreign currency (see Meinel 1963). However, since the exports into the non-socialist countries became only relevant in the 1970s it is possible to attribute some of the developments in electronic organ production to the increasing need for foreign exchange. One of these possible changes could have been massive subsidies which the state granted to gain a foothold in international markets. This occurred also within the distribution of other music instruments like guitars (see Fröhlich and Gertoberens 2020, 54).

The immediate precursor series of the Formation, the ET-6 continued the product politics of the former TO-Series. Every iteration of the electronic organ consisted of a one- and two manual version, sometimes in a third version in the form of a home or cabinet organ with additional functions like a rhythm machine that were seldomly produced in big numbers. In the 1970s the range of products was extended by analog strings, a separate rhythm machine (the ER 9) and an electronic piano (Weichert 1999).

The inner Workings of Research and Development and the Production of the Formation Series

One characteristic of socialist production culture at the VEB KHW was the formalization of the design process and the participation of people from outside the plant, mostly from state organizations. They had a say in every step of the production and were expected to ensure

that the product would align with cultural politics, satisfy domestic demand, and fulfill the many standards that products in the GDR had to adhere to. When the KHW worked out a new product it had to pass different stages that were called *Leistungsstufe* or *K-Stufe* (performance or K-stages). The meaning of the abbreviation "K" could not be clarified from the documents. The transition from one to the next stage of the so-called *Entwicklungsthema* (development theme) was approved in regularly held events called *Verteidigungen* (defenses). A great range of representatives handled these evaluations. The committee usually consisted of people from in- and outside of the VEB KHW; including musicians, representatives of the DEMUSA (a foreign trade organization of the GDR), the domestic trade department, different departments of the VEB KHW itself and organizations like the AIF (the principal design institution of the GDR). Additionally, most of these steps were supervised by the ASMW (see above).

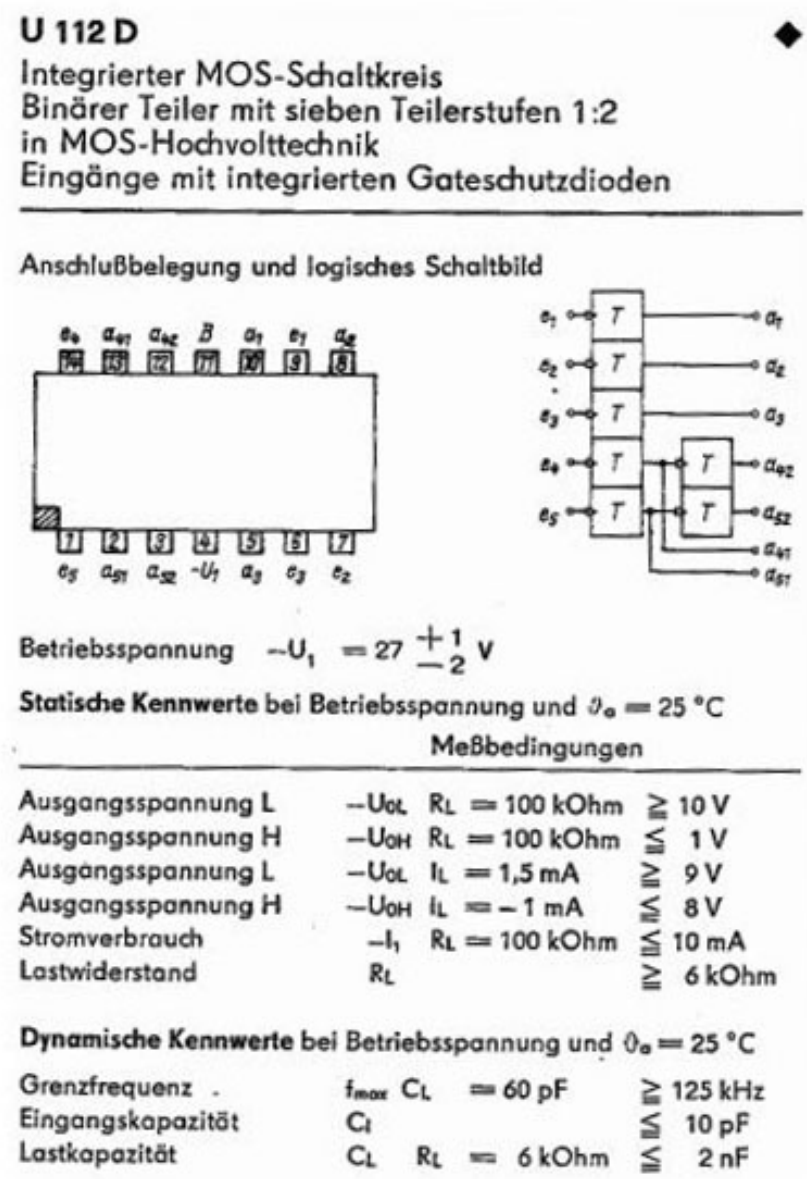

U 112 D

Integrierter MOS-Schaltkreis
Binärer Teiler mit sieben Teilerstufen 1:2
in MOS-Hochvolttechnik
Eingänge mit integrierten Gateschutzdioden

Anschlußbelegung und logisches Schaltbild

Betriebsspannung $-U_1 = 27 \begin{smallmatrix}+1\\-2\end{smallmatrix}$ V

Statische Kennwerte bei Betriebsspannung und $\vartheta_a = 25$ °C

		Meßbedingungen	
Ausgangsspannung L	$-U_{OL}$	$R_L = 100$ kOhm	$\geq$ 10 V
Ausgangsspannung H	$-U_{OH}$	$R_L = 100$ kOhm	$\leq$ 1 V
Ausgangsspannung L	$-U_{OL}$	$I_L = 1{,}5$ mA	$\geq$ 9 V
Ausgangsspannung H	$-U_{OH}$	$I_L = -1$ mA	$\leq$ 8 V
Stromverbrauch	$-I_1$	$R_L = 100$ kOhm	$\leq$ 10 mA
Lastwiderstand	R_L		$\geq$ 6 kOhm

Dynamische Kennwerte bei Betriebsspannung und $\vartheta_a = 25$ °C

Grenzfrequenz	f_{max}	$C_L = 60$ pF	$\geq$ 125 kHz
Eingangskapazität	C_I		$\leq$ 10 pF
Lastkapazität	C_L	$R_L = 6$ kOhm	$\leq$ 2 nF

Figure 6: The U 112 D data sheet. Source: https://www-user.tu-chemnitz.de/~heha/basteln/Konsumg%C3%BCter/DDR-Halbleiter/u112.gif

Especially the latter could intervene and change technical layouts and designs according to the governing technical standards. On the one hand, many of their rules and appliances aimed at producing a cheap, durable, and easily reparable product (thus sustainable in modern terms), on the other hand it seemed to have hindered the implementation of certain sound aesthetics of rock and pop music of that time. At least that is what the former worker Rolf Weichert tells in a radio feature, talking about the ET-6 2, that was still widely used in the 1980s. He especially references the ideal of the "unperfect" sound of the Hammond organ:

> "She could not do the real *Schweineorgel* [pig organ, a vernacular term for Hammond organ] because she was too good, too exact. Here, at Vermona we had to adhere to certain rules and standards, distortion factor and so on, a certain frequency response had to be fulfilled and not because it was needed in the music but because some people in these institutes wanted it this way. Actually, less would have been more back then." (translation A.v. K) (Schimke 2009, 14:44-15:17)

But how long and winding was the road from idea or plan to the actual product at the VEB KHW? Here, you can see a documentation of the stages, that the development theme Vermona Formation 1 went through:

Date/Year	***Leistungsstufe/* Developement**
Ca. 1971	First plan
January 9, 1978	First drafts and planning
August 28, 1979	Defense stage K2
January 1980	Defense Stage K5
August 1980	Defense Stage K8
October 1980	Defense Stage K10 / pilot series
January 1981	Transition to production

Generally, the Formation 1 can be understood as a side product of the main development theme, the Formation 2. The production of the Formation series prototypes already began in 1976. Although its product name Formation 2 suggested otherwise, it was brought to the market one year prior to Formation 1. With this model, most of the technical problems of the new series were solved. However, the Formation 1 houses – as its manual stresses – the same sound generation as the bigger brother (Anonym 1980a, 1). Thus, we need to investigate this process in detail to work out some of the difficulties resulting from socialist production culture, user de-signs and conflicting demands that went into the manufacture of the instrument which served as the blueprint for the Formation 1.

Though the market for electronic instruments was highly dynamic from the beginning of the 1970s on, the VEB KHW had to stick to the GDR's economies requirement to plan ahead their production years in advance. So, while the Formation 2 was published in 1979, the first concepts for a new series can be traced back to the start of the decade. An undated and fragmentary protocol shows considerations to develop a new one or two manual combo organ series as a successor of the ET-6. The paper proposes to implement a new phase vibrato or include a Leslie emulation. Also, its authors encourage the use of more integrated circuits and frequency dividers (which would eventually be achieved in the Formation series). However, a built-in tape recorder was not achieved and KHW only included a projected rhythm machine in the last iteration of the Formation series, the Formation 3 (see VEB Klingenthaler Harmonikaw-

erke n. y.). The planned schedule of the unnamed series quite matches the Formation 2 date of release, so formally it can be seen as a case of a successful project of socialist planning. In terms of technology and style however, it was inferior to its western counterparts quite obviously. Roughly three years later Yamaha would release the ground-braking digital DX7-Synthesizer.

Early on, the discussion about the user-design shows the uncertainties of possible applications of the new instrument series and how they affected the implementation of technical details.1976, we find a protocol that documents the *Rückmeldung zu neuen Effekten* (feedback to new effects). The paper summarizes the internal discussions about the several types of uses as well as possible users of the instrument. They proposed the production of two versions: (1) a simplified model for use in bands and (2) one for solo entertainers, housing additional stops and pedal keyboards. The latter being equipped with pedal keyboards and additional sounds that would not be necessary in playing with a full band (VEB Klingenthaler Harmonikawerke 1976). In 1977 the VEB KHW decided on further aspects of the instrument supposedly opting for the first variant of the band instrument: The team names the new organ series "Formation" (VEB Klingenthaler Harmonikawerke 1977c) which can be translated to "band" and the phaser module, that they finalized as a stand-alone product shortly before, became part of the effect section (VEB Klingenthaler Harmonikawerke 1977b). Also, the final artwork was sent out to the respective departments of the VEB KHW.

Over the course of development, many stakeholders were involved in the conception and further development of the Formation series and tried to shape its final user-design. Even outside of the *Verteidigungen* and even after the VEB KHW had decided on its principal outlay. One of these stakeholders was the *Möbel-Kulturwaren-Sportartikel* the socialist wholesale department. They wanted the new electronic instruments to be sold as a home or domestic organ. This request – justified with "the demands of the domestic trade" included the use of a rhythm machine, a piano effect and lesser effects than the predecessor ET-6. Also, the retail price should not exceed 2000 DM (East). One member of Vermonas development team did not receive the demands of the *Möbel-Kulturwaren-Sportartikel* too well as he worked through the letter. Above the line regarding the demands to settle for a home organ type instrument for this retail price, he comments "utopian!" and seems to be quite bewildered to hear it should contain *less* effects. A later message insists on these demands, quoting explicit customer requests and begs for the inclusion of the pedal keyboard (VEB Klingenthaler Harmonikawerke 1977a) to cater to the home organ market. This example shows one instance of the conflicts of product development in the socialist production culture between particular (state) stakeholders and the development team that had to act on these claims and find practical solutions. It also shows, how material constraints and technical capacities hindered the development of – in this case – broader product portfolios.

A change to the design illustrates another aspect of the production culture: The inspiration drawn from actual musical practice and the experience of musicians that were frequently asked for advice in the production process. One of these alterations to cater to musicians needs happened as late as1978, when the VEB KHW had nearly finalized the instrument, including the decision to gear it completely towards live playing. After some technical improvements (experimenting with different filter models to get the sinus sound of the 8′ stop right) the interface was rearranged (VEB Klingenthaler Harmonikawerke 1978a). Most importantly however, the pivoted stand of the predecessor was replaced with a stable stand (VEB Klingenthaler Har-

monikawerke 1978c). The VEB KHWs documentation of the decision cites the (international) phenomenon of stacking. This alluded to the fact that in live situations many keyboard players mounted their instruments above each other to be able to access a greater range of sounds of individual instruments. Members of the development team also witnessed this practice at the *Zentraler Leistungsvergleich Amateurorchester* (Central Contest of Amateur Orchestras) in East Germany. An additional change made in this regard is the leveled top side of the Formation 1. Later advertisements even presented the Formation series as part of such assemblages of different key instruments from the Vermona brand.

Another noticeable influence on price, as well as user-design in these years was the so-called *Weltstand*, a term the VEB KHW used in the documents to describe the (mostly capitalist) state of development regarding technology and economy. At least since the 1970s, this orientation played a key role in both trying to satisfy musicians with timely (western) designs and catering to businesses of the non-socialist-world. Members of the electronic instrument department investigated production techniques and new design trends on occasions like fairs and trade shows. These aforementioned *Studiengruppen* made detailed market and product analyses (VEB Klingenthaler Harmonikawerke 1980a), gathering lists of features, technologies and prices of the competition instruments from the west. These were used to spot for possible product niches for the much-needed foreign currencies which would be generated by selling the instruments (mostly under western trade marks) in Western countries. Their results for the market position of the Formation 2 place it among rather cheap models of western brands (ELGAM and GEM) (VEB Klingenthaler Harmonikawerke 1978d). Regarding its sound generation, the sinus is rated as on par with the *Weltstand*. The phase vibrato however would even surpass most of the other products and stand above a normal vibrato.

Silent Launch of the Formation 1

At the end of 1979 the Formation 2 went into serial production. One year before, the one manual model of the same name is mentioned the first time. While such a variant was planned from the beginning of the 1970s, it first occurs in a letter from the sales department in 1978 as the variant of the new series: There we can find a sketch of the interface that differs from the final product in many ways (see Fig. 7). First, the stops are arranged in another way, the separated bass section is not to be found yet and the vibrato is not adjustable. Also, the letter demands a relatively complex circuitry which automatically levels the dynamics of the different stops (that will be pragmatically solved with the adjustable levers later) (VEB Klingenthaler Harmonikawerke 1978b). While the concept's title explicitly speaks of the instruments as one that is specialized for bands it still upholds possible additions for solo entertainers like the split keyboard and the *percustain*-stops or piano attack, which eventually found their way into the Formation 1.

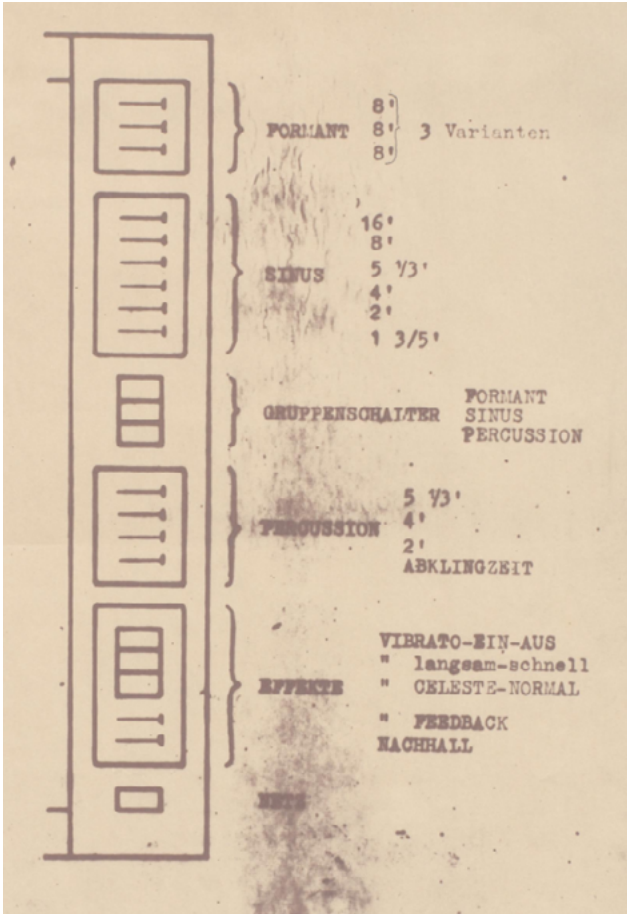

Figure 7: The initial sketch for a one manual keyboard of the new "ETI"-Series from VEB Klingenthaler Harmonikawerke (09.01.1978): Konzeption Formation 1. Sächsisches Staatsarchiv, 31123. Picture: The author.

The further development of the Formation 1 takes place without much trouble. In a document from 28th August 1979, we find a hint that the instruments will be subject to a defense of the stage K 2 as the successor of the ET 6-1 (VEB Klingenthaler Harmonikawerke 1979). Later, in 1980s it is already in stage K 5. Though one stakeholder protests because a defense cannot be held due to shortage of time, the new variant is presented at the Leipzig autumn fair in 1980 (Anonym 1980b, 1106). An evaluation document on the same fair instructs the transition from project status into the pilot series of 25 pieces in October 1980. In the same paper we find that the new model will use the international standard of the jack plug as output, replacing the former DIN-Plugs (VEB Klingenthaler Harmonikawerke 1980c). 1983 the "development theme Formation 1" is completed.

VEB KHW advertised the instrument directly to professional and semiprofessional musicians via private contacts and provided them with opportunities to test the Formation series. Additionally, promotional material was published as printed information material and disseminated to the GDR and international (music) press. One piece promises that with the Formation 1, one could reproduce the sound of the "electromagnetic organ" and the "mechanical rotor" without putting up with the heavy weight that comes with it. While they were referencing the Hammond organ (especially its sound) the Formation 1 was at the same time promising to surpass it in terms of practicality (DEMUSA o. J.).

Reception of the Formation Series and the Reactions at the VEB KHW.

The VEB KHWs production culture – as we may conclude from this short insight – was not exclusively shaped by bureaucracy and interventions by the state, but also by a desire to include musicians' wishes and an orientation towards the general trends of the world market. The musical instruments produced in the GDR however, especially the ones designed for the use in rock and pop music, were not received that well. The so-called *Ostrock*-scene criticized supply shortages, sound, and functional problems and finally the lacking "sexiness" of much of Klingenthal's attempts at said instrument segment. One example, a parody song, even carries the name of the electronic instrument brand. The song "Vermona" by the band Reaggae Play portrays how many musicians had to turn to "dark sources" to get themselves the much-needed rock instruments (from the west). The famous band City once released the air out of a balloon at a concert of the youth organization FDJ producing a "farting" sound, telling the laughing crowd they had brought a GDR-Instrument (see Hofmann, February 20, 1999). Though much of this disdain seemingly resulted from the general western bias of many rock musicians in the East and was not always justified in terms of sound or functionality (see Leitner 1983, 201) it was noted at the VEB KHW production plant in Schöneck.

A document containing feedback to the new Formation series gives insight into the critical remarks which where possible to communicate inside the VEB KHW regarding their own instruments. While preparing the presentation of the Formation 2 for the "day of the music" one member of a study group informs his co-workers about the reception of the instrument among professional musicians. While the Formation series would generally be assessed as "excellent" and regarded as a suited tool for "rock and pop groups" no one would actually use it in the proposed live setting. The musicians justified their decision with the lacking "design harmony" with the other (possibly western) instruments as a reason and demanded a "consistent pragmatic style (Colors Black/Silver or just Metallic)" (translation A.v.K.). Regarding the technology, they preferred the "possibility of real combinations" (translation A.v.K) (VEB Klingenthaler Harmonikawerke 1980b), criticizing the many effects that were included in the predecessor instrument, the ET 6-2. Instead of orchestral emulations they demand specialized instruments, each representing one general sound. This specific demand hints at the practice of stacking but it seemed that, in the eyes of the GDR rock and pop musicians, the Formation series did not present one of these distinguished instruments.

The music press mostly paraphrased the advertisement texts of the Vermona brand but never uttered too enthusiastic verdicts about the products, especially the Formation series. Often the instruments were mentioned for the sake of completeness alone. In the music magazine *Melodie & Rhythmus*, Stefan Lasch presented different instruments of rock and pop music in the form of a recurring column *Instrumentensteckbriefe*. He writes that the Formation series organ, if connected to a proper amplifier and loudspeaker would "suit the demand of modern rock as far as possible". While the phaser was praised for its contribution to the overall sound, the stand was seen as antiquated. The journalist closes with the telling remark that a further feedback would need more "practical appliances" of the instrument (Lasch 1980, 18), which were obviously scarce in the East Germany rock scene.

Figure 8: A picture of the demonstration concerto for the Formation series and other instruments of the VEB KHW from the article of Klages. Picture: The author.

Two years later Antje Klages writes a more detailed report on such "practical appliances" in the same magazine. The starting point is the presentation of several Vermona instruments *at Barock bis Rock* (Baroque to Rock), a concert that was initiated by the VEB KHW itself to present the whole range of possible music that could be played with their instruments. (see Fig. 8) She praises the performances, especially of Wilfried Schneider and Wolfgang Scheffler, the keyboarder of the East-Rock band LIFT who also composed special pieces and arrangements for the occasion (Klages 1982, 15). However, she also criticizes the sound quality of the speakers and the lacking attendance of experts, soloist, and teachers, as well as "new content-related aspects" (translation A.v.K). Why, does she ask, is there not a bigger literature especially for electronic keyboard instruments? Finally, she assumes that especially New Music is not really interested in using this kind of instrument.

Conclusion

This article presented a case study of the Formation 1, an electronic organ made in Schöneck, part of the famous *Musikwinkel* in the GDR. It tried to illustrate how production cultures shape musical instrument design in industrial manufacturing. We choose a model from the Formation series for its good documentation in the state archives of Saxony in Chemnitz and the possibility to study a nearly 100 percent original instrument in detail. The documents and the instrument reveal not just everyday problems of instrument design like the search for prospec-

tive uses and the consequences of this choice on configuration and design; they also demonstrate how a socialist economy struggled to compete in a highly dynamic international market like the one of electronic organs in the late 1970s.

The theoretical framework of the production culture perspective proved to be a handy tool to dismantle the influences of the production site dimensions of the VEB KHW. Among other "facets" we found examples for how market, technology, regulations and associated musical cultures shaped, hindered or enabled aspects of outer design, sound generation or marketing. This materialization of the specific production culture of the Vermona brand can even be traced into the "wires", the inner design of the Formation 1: (1) The use of chips from the US for the principal sound generation signals the lacking technological basis for semiconductor design regarding consumer electronics; (2) the vast application of the divide-by-two chip U 112 D across the instrument was a seldom case of a component designed *exclusively* for electronical musical instruments (3) modelling the sinus sound engine after the famous Hammond organs additive synthesis stands for the general idea of pleasing the GDR musicians who were geared toward western rock and pop music.

Another important factor of production culture was the influence of actors from outside the VEB KHW, institutionalized in the *Verteidigungen* and the many ways in which they intervened via letters and other forms of correspondence. The highly formalized process of product development offered leverage not just for political supervisors or musicians, but also state organization like the AMSW. They enforced the compliance with many standards of the GDRs industry like minimizing the use of components from the West or aiming at a sustainable use of material. The documented discussions about the future application of the instrument – whether it should be used in a home setting or work as a tool for bands in a live setting – show how these actors from outside tried to influence the outcome of design processes in ways that (probably) would have benefitted their own interest.

Finally, our study tried to shed light on the contradictions and hardships of producing a then-trendy instrument like an electronic organ under the conditions of such a planned and socialized economy. Even musical instruments seemed to be not a product of a single business or inventor, but rather of an organizational body with competing interests and aims, that had to somehow negotiate. The development team – as many documents reveal – tried to mediate in this way, both earthing and guiding the different demands into a functioning product. The team of the VEB KHW also was aware of the limitations of the GDR's economy as well as the appeal of western musical instruments, especially in the sphere of rock and pop music, as the internal documents on the reception of the Formation series showed. Still, they tried to work out solutions to emulate "iconic" instruments like the Hammond organs additive sinus sound and adjust the Formation series design to common musical practices like "staking".

This article could just present and evaluate a fraction of the vast number of documents on the inner processes of the VEB KHW, even regarding the Formation series. Future research on electronical instruments – or any instruments produced on an industrial scale - has the potential to unearth even more hidden trajectories and logics of sound producing devices from these rich source materials. Another interesting desideratum is the actual use and afterlife of the instrument series in so-called hauntological musical practices: the Formation 1 and other instruments from the GDR's electronic portfolio resurfaced as a kind of sound souvenir from the 1970s in the Berlin music scene of reunited Germany.

List of Figures

Sound Examples

List of References

Akrich, Madeleine. 1992. "The De-Scription of Technical Objects." In *Shaping Technology / Building Society: Studies in Sociotechnical Change*, edited by Wiebe E. Bijker and John Law, 205-224. Cambridge: MIT Press.

Anonym. 1980a. *Bedienungsanleitung Formation 1*.

Anonym. 1980b. "Das Angebot Der Musikinstrumenten-Industrie Der DDR Zur Leipziger Herbstmesse 1980." *Das Musikinstrument* 7 (10): 1106.

Burkhart, Benjamin, Niebling, Laura, van Keeken, Alan, Jost, Christofer and Martin Pfleiderer (Ed.). 2021. *Audiowelten. Technologie und Medien in der populären Musik nach 1945 - 22 Objektstudien*. Münster: Waxmann.

Börner, Wolfgang, and Peter Krause. 1988. *Zur Geschichte Der Klingenthaler Harmonikawerke.* Klingenthal: VEB Klingenthaler Harmonikawerke.

Carson, Barry. 1996. "Keyboards." In *Rock Hardware: 40 Years of Rock Instrumentation. The Great Instruments, How They Are Used and How They Shape the Sound of Popular Music*, edited by Paul Trynka. 2nd ed., 30-29. London: Balafon.

Dawe, Kevin. 2010. *The new Guitarscape in Critical Theory, Cultural Practice and Musical Performance*. New York: Routledge.

DEMUSA. o. J. Formation 1. Harmonika Museum Zwota.

Duane, Jim. 1999. "All About the Eternal Top-Octave-Synthesizer-TOS IC'S." Accessed November 25, 2020. http://www.armory.com/~rstevew/Public/SoundSynth/TopOctave/topdividers.html.

Fröhlich, Thomas, and Klaus Gertoberens. 2020. *Musima: Gitarren Für Die Ganze Welt /Guitars for the Whole World.* Meisterleistungen deutscher Instrumentenbaukunst 9. Markneukirchen: Musikinstrumenten-Museum Markneukirchen.

Froschauer, Ulrike, and Manfred Lueger. 2016. *Artefact Analysis in Organisational Research.* Discussion Paper Series 2016/2. Wien. https://epub.wu.ac.at/5113/1/FroschauerLueger2016.pdf.

Hofmann, Tim. 1999. "Die Zeugen Vermonas: Von Der Plauener Kino-Orgel Zum Musikerschreck - Aufstieg Und Niedergang Vogtländischer Keyboards." *Freie Presse*, February 20.

Hofmann, Tim. 2014. *Weltweit! Wie Sachsen Und Vogtländer Musikinstrumente Bauen.* Chemnitz: Chemnitzer Verlag.

Jost, Christofer, and Martin Pfleiderer. 2019. "Projektbeschreibung." Accessed January 16, 2020. https://musikobjekte.wordpress.com/projekt/projektbeschreibung/.

Klages, Antje. 1982. "Barock Bis Rock: Experimentierpodium Mit Zukunft?" *Melodie & Rhythmus* (9): 15.

Lasch, Stefan. 1980. "Rock-Instrumentensteckbrief: Neue Vermona-Keyboards." *Melodie & Rhythmus* (12): 18.

Leitner, Olaf. 1983. *Rockszene Der DDR: Aspekte Einer Massenkultur Im Sozialsimus.* Reinbek bei Hamburg: Rowohlt.

Lueger, Manfred, and Ulrike Froschauer. 2018. *Artefaktanalyse.* Wiesbaden: Springer.

Malycha, Andreas. 2016. "Konsumsozialismus." *INDES* 5 (4): 80–87.

Meinel, Paul. 1963. "Über Die Nächsten Aufgaben Der Musikinstrumentenindustrie." *Industriezweig-Informationen* 1 (1): 4.

Nathaus, Klaus. 2014. "Auf Der Suche nach Dem Publikum: Popgeschichte Aus Der „Production of Culture"-Perspektive." In *Popgeschichte. Band 1: Konzepte Und Methoden*, edited by Alexa Geisthövel and Bodo Mrozek, 127–53. Bielefeld: Transcript.

Oudshoorn, Nelly, Els Rommes, and Marcelle Stienstra. 2004. "Configuring the User as Everybody: Gender and Design Cultures in Information and Communication Technologies." *Science, Technology, & Human Values* 29 (1): 30–63. https://doi.org/10.1177%2F0162243903259190.

Peterson, Richard A., and N. Anand. 2004. "The Production of Culture Perspective." *Annual Review of Sociology* 30: 311–34.

Schiffer, Michael Brian (1993). "Cultural Imperatives and Product Development: The Case of the Shirt-Pocket Radio". In: *Technology and Culture* 34(1): 98–113.

Schimke, Robert. *Vermona: Ein Klangbild Aus Klingenthal*: MDR, 2009. Radio.

VEB Klingenthaler Harmonikawerke. o. J. Protokoll Planungen ETI. Sächsisches Staatsarchiv.

VEB Klingenthaler Harmonikawerke. 1976. Rückmeldung Zu Neuen Effekten. Sächsisches Staatsarchiv.

VEB Klingenthaler Harmonikawerke. 1977a. Forderungen Des Binnenhandels. Sächsisches Staatsarchiv.

VEB Klingenthaler Harmonikawerke. 1977b. Combo-Orgel Planung. Sächsisches Staatsarchiv.

VEB Klingenthaler Harmonikawerke. 1977c. Namensfestlegung Formation. Sächsisches Staatsarchiv.

VEB Klingenthaler Harmonikawerke. 1978a. Combo-Orgel Chronik. Sächsisches Staatsarchiv.

VEB Klingenthaler Harmonikawerke. 1978b. Konzeption Formation 1. Sächsisches Staatsarchiv.

VEB Klingenthaler Harmonikawerke. 1978c. Schwenkbares Stativ Combo Orgel. Sächsisches Staatsarchiv.

VEB Klingenthaler Harmonikawerke. 1978d. Preisvergleich Formation 2. Sächsisches Staatsarchiv.

VEB Klingenthaler Harmonikawerke. 1979. Planungen ETI. Sächsisches Staatsarchiv.

VEB Klingenthaler Harmonikawerke. 1980a. Studiengruppen Und Weltstand. Sächsisches Staatsarchiv.

VEB Klingenthaler Harmonikawerke. 1980b. Expovita Bands. Sächsisches Staatsarchiv.

VEB Klingenthaler Harmonikawerke. 1980c. Maßnahmenplan Auswertung LHM. Sächsisches Staatsarchiv.

Weichert, Rolf. 1999. Chronik zur Entwicklung und dem Bau von Musikelektronik in der DDR. Eine Zeitleiste mit technischen Details und geschichtlichem Kontext der historischen Produktion von Musikelektronik in der DDR. Musikinstrumentenmuseum Markneukirchen.

Weller, Enrico. 2018. "Das Verlagssystem Im Vogtländischen Musikinstrunentenbau." In *Beiträge Zur Jahrestagung Der Gesellschaft Für Musikforschung in Kassel 2017: Das Populäre in Der Musik Und Das Musikverlagswesen*, edited by Jan Hemming and Anette van Dyck-Hemming, 217–27. Wiesbaden: Springer.

Würker, Lutz and Würker, Evelyn. "Entwicklung und Bau elektronischer Musikinstrumente in der DDR". Vermona-DDR.de. Accessed: October 17, 2021. http://www.vermona-ddr.de/.

Alan van Keeken studies musicology, sociology, and political science at Justus-Liebig-University Gießen. He wrote his master thesis about German language mainstream pop, the "Phänomen Deutschpop ca. 2004-2011". From 2018 on he worked in the research project "Musical objects of popular culture" at the center for culture and popular music at the Albert-Ludwigs-University Freiburg. Since 2021 he works as a scientific assistant at the musicology department of the Martin-Luther-University Halle-Wittenberg. He has published several articles and reviews about music technology, mainstream music research and phonomusicology. Currently he works on his doctoral thesis "The home organ in Western Germany 1958-1989".

Abstract (English)

The Vermona Formation 1 (1981) was a classical combo organ produced at the VEB Klingenthaler Harmonikawerke in the "Musikwinkel" region of Saxony. This paper tries to understand the instrument as the result of a specific production culture of state-owned enterprises in the GDR of the 1980s. The design team had to navigate the demands and instructions of

several stakeholders, including the state and domestic and foreign trade organizations. At the same time, they had to work with limited resources - especially regarding advanced sound generation - compete on the international market and satisfy west-oriented rock musicians in the GDR.

Abstract (Deutsch)

Die Vermona Formation 1 (1981) ist eine klassische elektronische Orgel bzw. Combo-Orgel, die im VEB Klingenthal im sächsischen Musikwinkel hergestellt wurde. Dieser Beitrag versucht das Instrument als Ergebnis einer spezifischen Produktionskultur staatlicher Unternehmen in der DDR der 1980er Jahre zu verstehen. Das Team hinter dem Instrument musste dabei mit den Anforderungen verschiedenster Akteure arbeiten, vom Staat selbst bis hin zu Binnen- und Außenhandel. Zur gleichen Zeit hatten sie – besonders im Bereich der avancierten und günstigen Klangerzeugung - mit begrenzten Ressourcen zu kämpfen, hatten sich auf dem internationalen Markt zu bewähren und versuchten, den Ansprüchen westorientierter Rockmusiker*innen gerecht zu werden.

Proposal for Citation. Keeken, Alan van. 2022. "Socialism in the wires? The production of the electronic organ Vermona Formation 1 (1980)." In *Transformational POP: Transitions, Breaks, and Crises in Popular Music (Studies)*, edited by Beate Flath, Christoph Jacke and Manuel Troike (~Vibes – The IASPM D-A-CH Series 2). Berlin: IASPM D-A-CH. Online at http://www.vibes-theseries.org/van-keeken-vermona.